HSF Compliant

REV.	ECN NO.	DESCRIPTION	DRAW	CHECK	APPD.	DATE
A0		新版发行	Jody	Linson	Rambo	2023.12.25

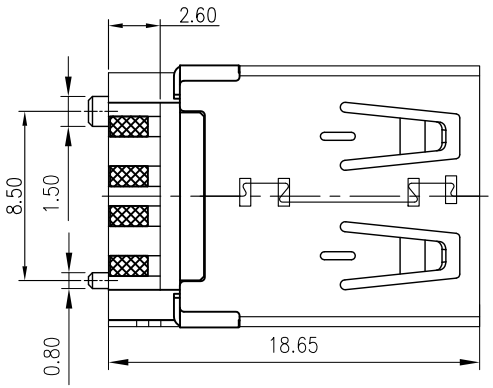

SPECIFCATIONS:
Contact current Rating:
1.8 Amperes for pin1&pin4.
0.25 Amperes other contacts
Dielectric Withstanding Voltage:AC 100V(RMS)
Insulation resistance:100Megohms Minimum.
Contact Resistance:
30mΩ Max for pin1&pin4
50mΩ Max for other contacts
Mechanical Characteristics:
Mating Force:35 Newtoms.Maximum
Unmating Force:10 Newtoms.MInimum.
MATERIAL: 8N Min After Durability
Housing: PBT+30%GF 94V-0 COLOR:SEE TABLE
Contact: copper alloy(T=0.25mm)
Shell: Brass/Spcc
PLATING:
Contact: Au Plated on contact area
Tin Plated on solder area
Nickel underplating over all
Shell: Nickel Plated
operating Temperature:-55° to +85°

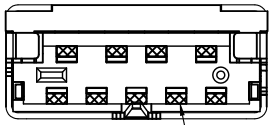

9P后塞焊盘加锡

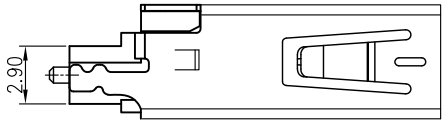

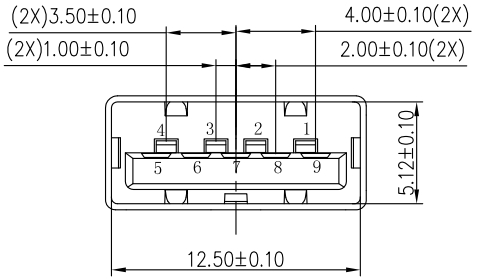

料号备注

A=PACK-T0124
T=PACK-T0033

CU	3	F	630	S	XX	X	XX	X	X

12=半金雾锡1U"	00=PBT黑色铜壳镀镍		
13=半金雾锡3U"	01=PBT白色铜壳镀镍		
14=半金雾锡5U"	02=PBT黑色铜壳镀金		
15=半金雾锡15U"	03=*PBT黑后塞PBT盖不锈钢壳镀镍	R=ROHS2.0标准	B=盐雾24H
16=半金雾锡30U"	04=*PBT白后塞PBT盖不锈钢壳镀镍	W=无卤+ROHS2.0	C=盐雾48H

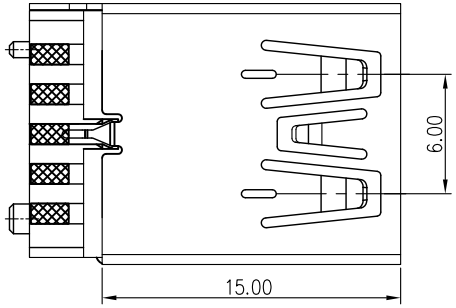

Pin Number	Signal Name
1	VBUS
2	D-
3	D+
4	GND
5	SSRX-
6	SSRX+
7	GND
8	SSTX-
9	SSTX+
Shell	Shield

东莞市兴科杰鑫电子有限公司
Dong Guan XingKeJieXin Electronics Co.,Ltd

UNLESS OTHERWISE SPECIFIED TOLERANCES

	METRIC
.X +/-	0.35
.XX +/-	0.25
.XXX +/-	0.15
FRACTIONS +/-	
ANGLES +/-	2.00°

DIMENSIONS (METRIC) (MM)

APPROVAL		日期
制图	Jody	23.12.25
审核	Linson	23.12.25
核准	Rambo	23.12.25

文件位置

ANGLE OF PROJECTION

品名规格: USB 3.0 AF 180° 焊线A款 无卷边 带短路脚 [外壳铆两脚 后塞加锡 带定位柱]

料号: SEE TABLE

字张: A4 | 工程图号: DWG-USBAF-694 | 版本: A0

比例: 1 : 1 | 状态码: A | 页数 1 OF 1