HSF Compliant

REV.	ECN NO.	DESCRIPTION	DRAW	CHECK	APPD.	DATE
A0		新版发行	YIN	BENDEE	BENDEE	2022.05.10

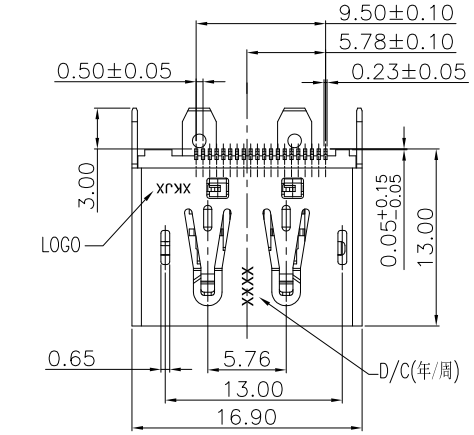

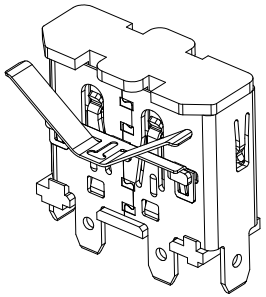

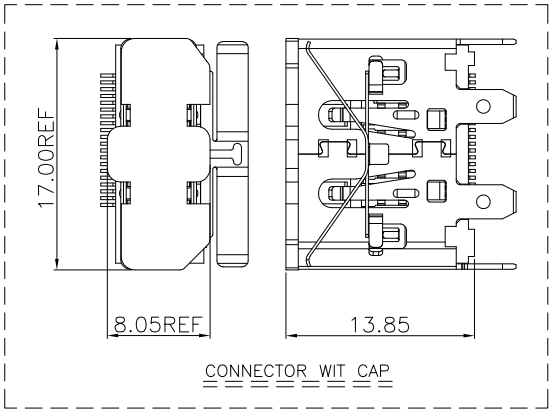

MATERIALS
1.HOUSING:LCP, (UL 94V-0), BLACK
2.TERMINAL:BRASS (C2680),
SEE TABLE GOLD PLATING. ON CONTACT AREA,
MATTE TIN 50u" Min. PLATING ON SOLDER TAIL,
UNDER NICKEL PLATING 50u" Min OVER ALL.
3.SHELL:SUS304, NICKEL PLATING 50u" Min.
4.SPRING:SUS304,CLEANING.

SPECIFICATION
1.CURRENT RATING : 0.5 A MAX.
2.DIELECTRIC WITHSTANDING VOLTAGE : 500V AC R.M.S.
FOR ONE MINUTE.
3.INSULATION RESISTANCE : 1000M OHMS MIN.
4. CONTACT RESISTANCE : 30m OHMS MAX.
5. OPERATING TEMPERATURE : -20°C TO +85°C.
6. INSERTION FORCE : 4.5kgf MAX.
7. EXTRACTION FORCE : 1.0~4.0kgf MIN.
8. SALT SPRAY : 48 HOURS PASS.
9. REFLOW SOLDERING(SMD COMPONENT) OVEN
10.TEMPERATURE:260°C.5SEC

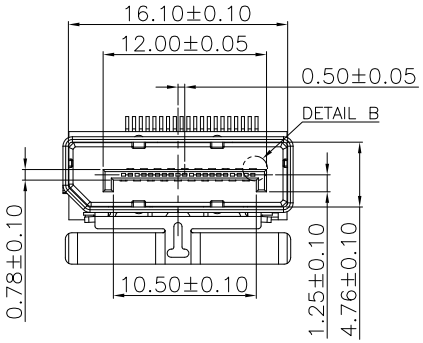

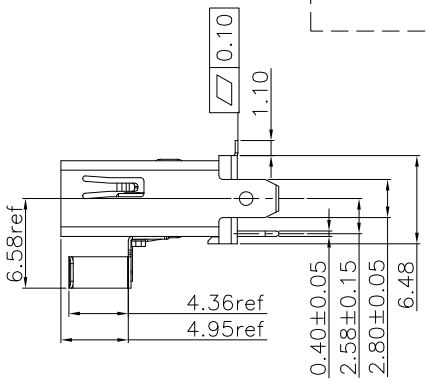

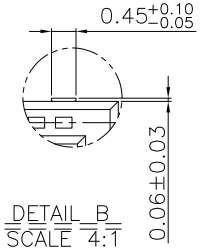

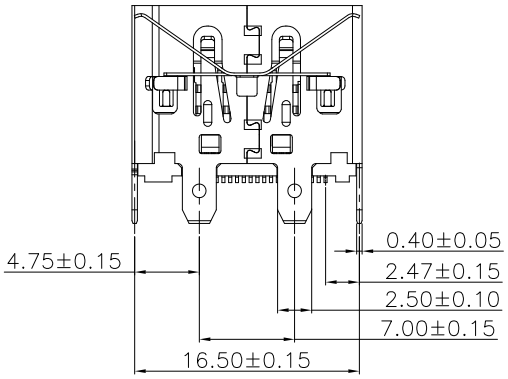

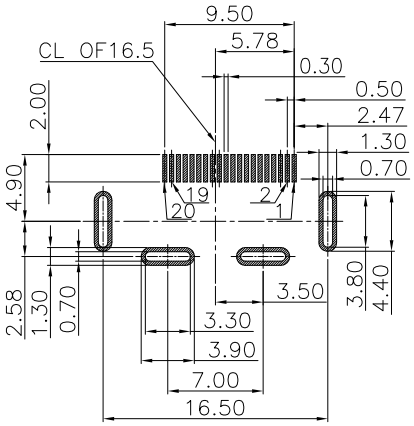

RECOMMENDED P.C.B LAYOUT(TOP VIEW)
TOLERANCE: ±0.05

料号备注

CP	0	F	025	M	XX	X	XX	X	X

T=PACK-T0271
R=PACK-R0214

12=半金雾锡1U"
13=半金雾锡3U"
14=半金雾锡5U"
15=半金雾锡15U"
16=半金雾锡30U"
53=接触区1U",焊接区1u"
54=接触区3U",焊接区1u"
55=接触区5U",焊接区1u"
56=接触区15U",焊接区1u"
57=接触区30U",焊接区1u"

00=LCP黑不锈钢壳镀镍

R=ROHS2.0标准
W=无卤+ROHS2.0

D=盐雾24H
C=盐雾48H

东莞市兴科杰鑫电子有限公司
Dong Guan XingKeJieXin Electronics Co.,Ltd

UNLESS OTHERWISE SPECIFIED TOLERANCES	METRIC
.X +/-	0.30
.XX +/-	0.25
.XXX +/-	0.20
FRACTIONS +/-	
ANGLES +/-	2.00°
DIMENSIONS	
(METRIC)	(MM)

APPROVAL	日期
制图	
审核	
核准	
文件位置	

ANGLE OF PROJECTION

品名规格	DP 180度 直立式SMT H13.0 外壳脚长3.0 有下弹片
料号	SEE TABLE
字张 A4	工程图号: DWG-CPAF-025 版本. A0
比例 1 : 1	状态码 A 页数 1 OF 1